Hood

EA06C

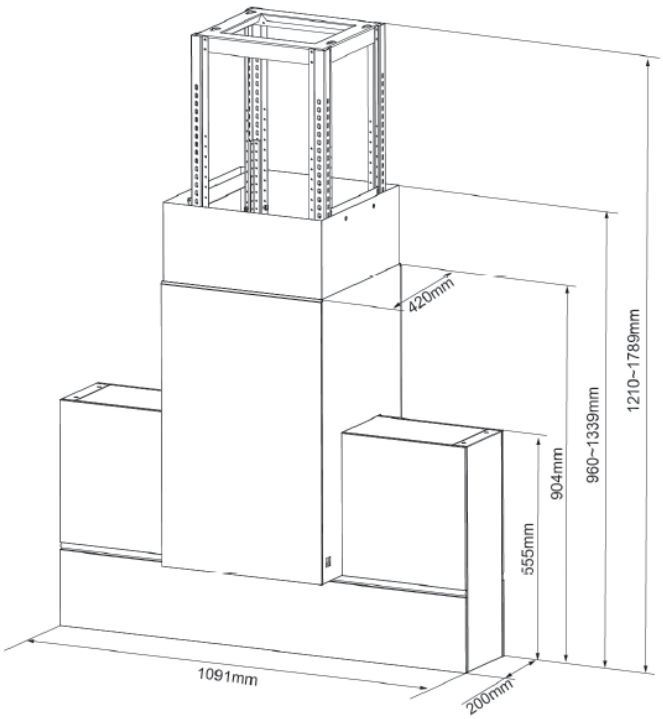

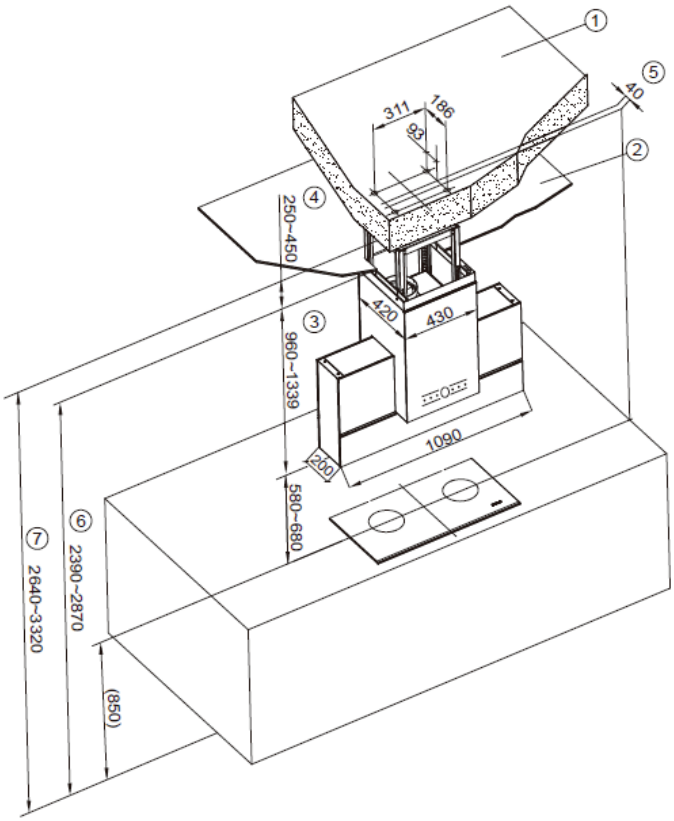

① Installation area:roof for the fixed mounting rack;

② Ceiling board;

③ Adjustable height range from range hood to the ceiling board;

④ Adjustable range allowed between the ceiling board and the installation roof;

⑤ Deviation distance among the center lines for the hob burner,the range hood and the roof mounting hole;

⑥ Height range from the ground to the ceiling board that is adaptable to the range hood;

⑦ Height range from the ground to the roof that is adaptable to the range hood.